Digital System Design

Accelerator Architecture & Design Consideration

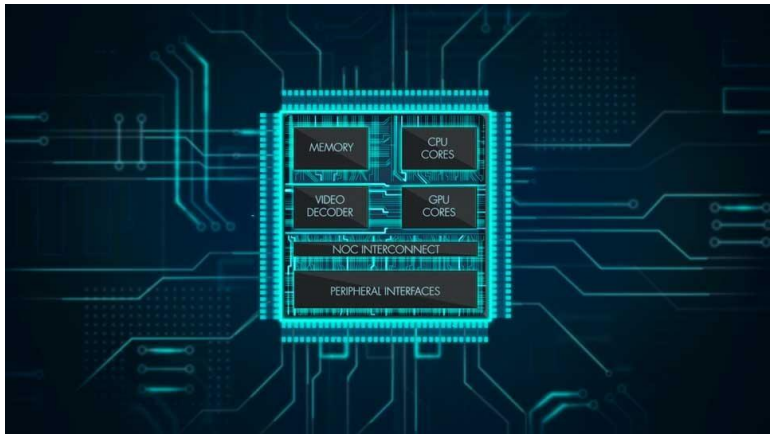

Date :	2026. 04. 09.
Instructor :	**Prof. Hyun Kim**
Lecture Note :	eclass.seoultech.ac.kr
Office :	Mirae Hall #526
Web :	idsl.seoultech.ac.kr
Contact :	hyunkim@seoultech.ac.kr / 010-9600-5427

Contents

- Accelerator Architecture (Remind)
- Design Consideration

Contents

- Accelerator Architecture (Remind)
- Design Consideration

Block Diagram (Remind)

- **Global Controller**
  - Controls the overall operation of all modules.
- **Processing Unit**
  - Consists of **a local controller** and **processing elements (PE)** that perform operations.
- **Buffer**
  - Stores data for reading and writing.

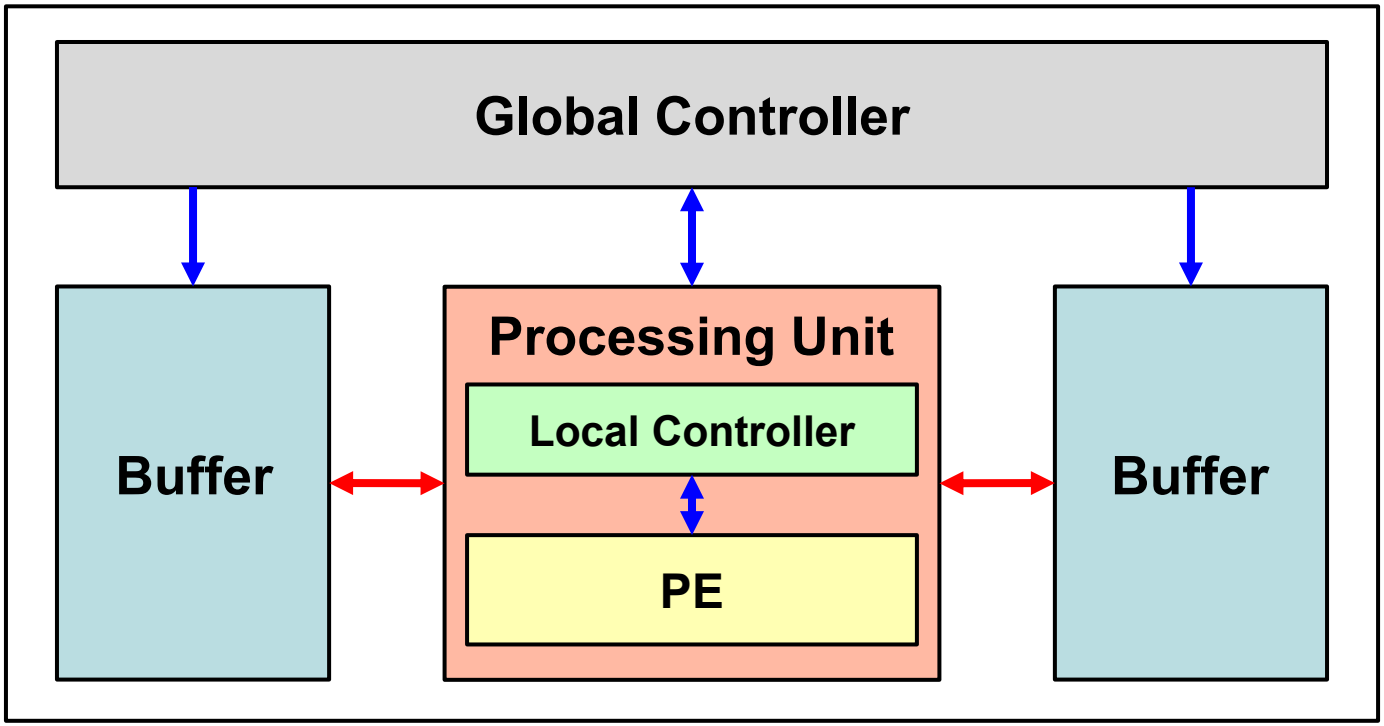

: Control : Data

Recursive End-to-End Flow (1)

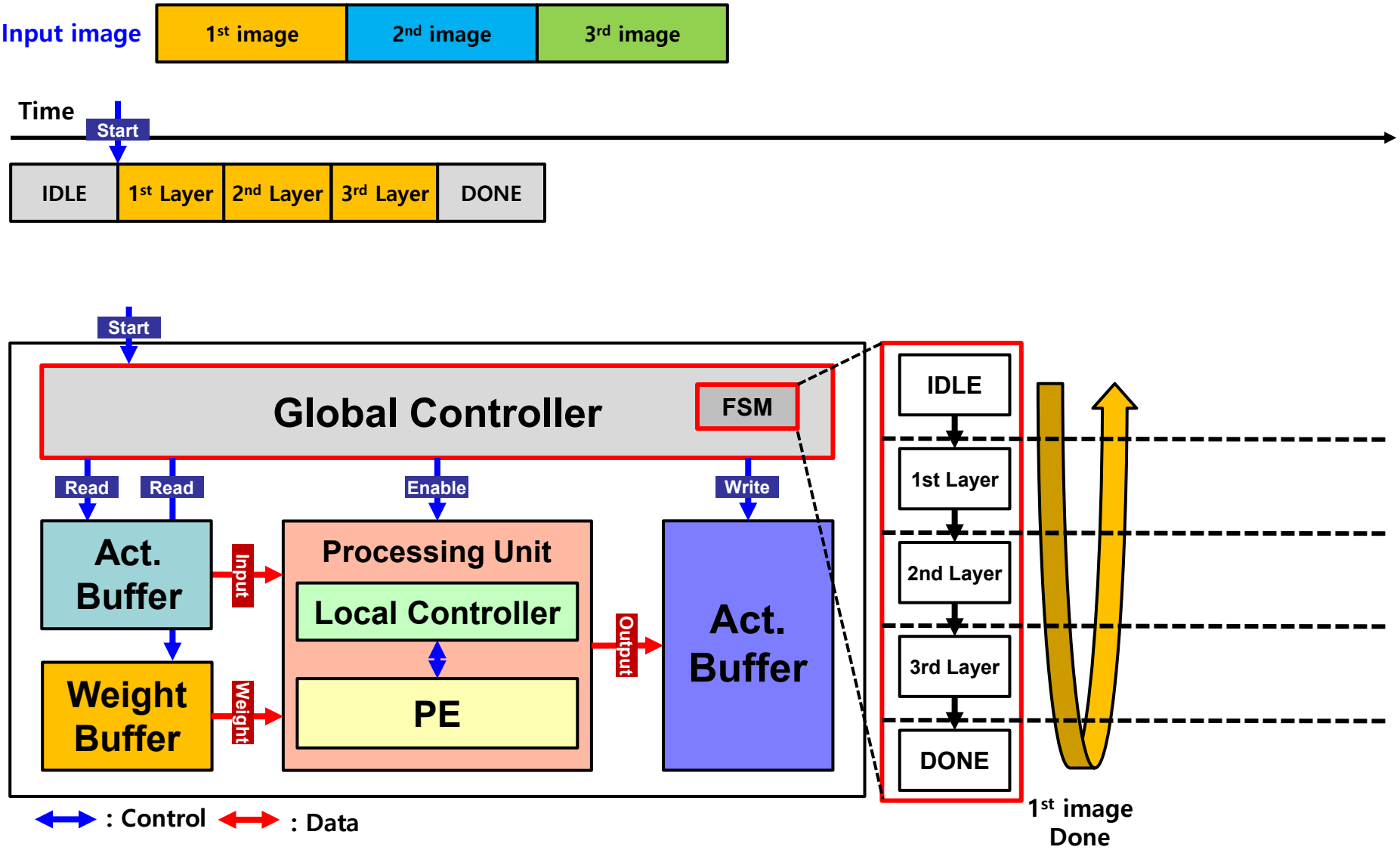

Recursive End-to-End Flow (2)

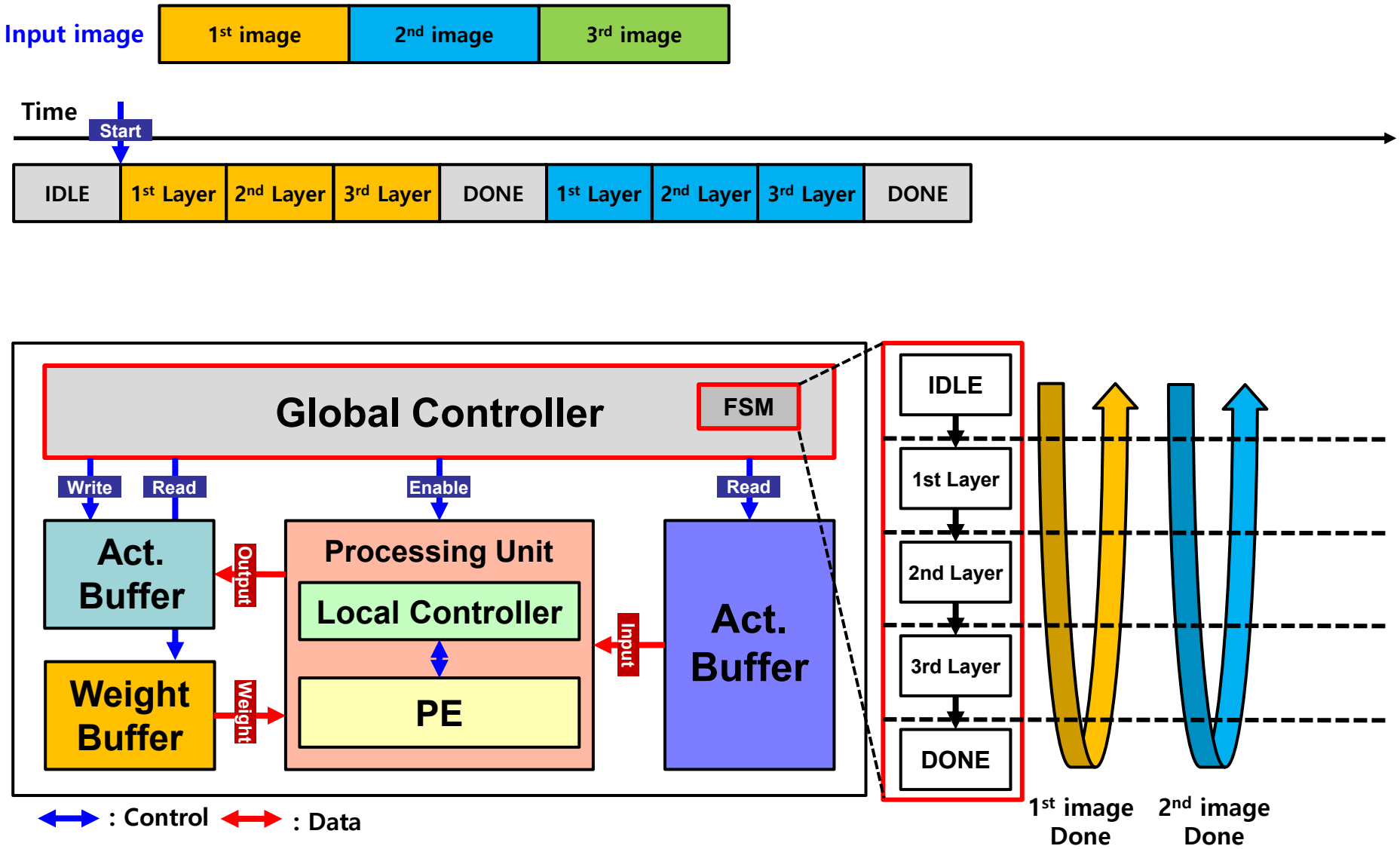

Recursive End-to-End Flow (2)

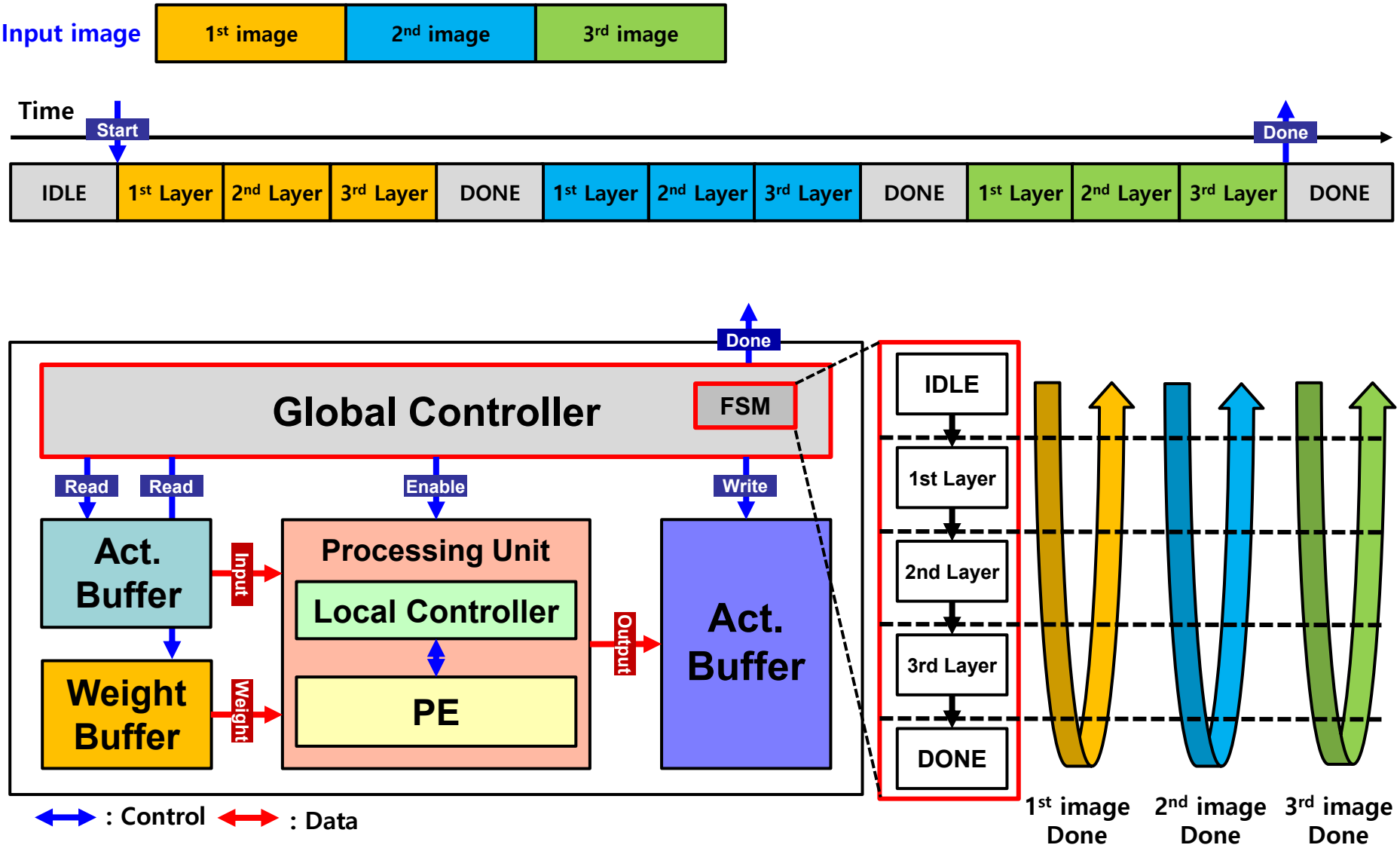

Streamline End-to-End Flow (1)

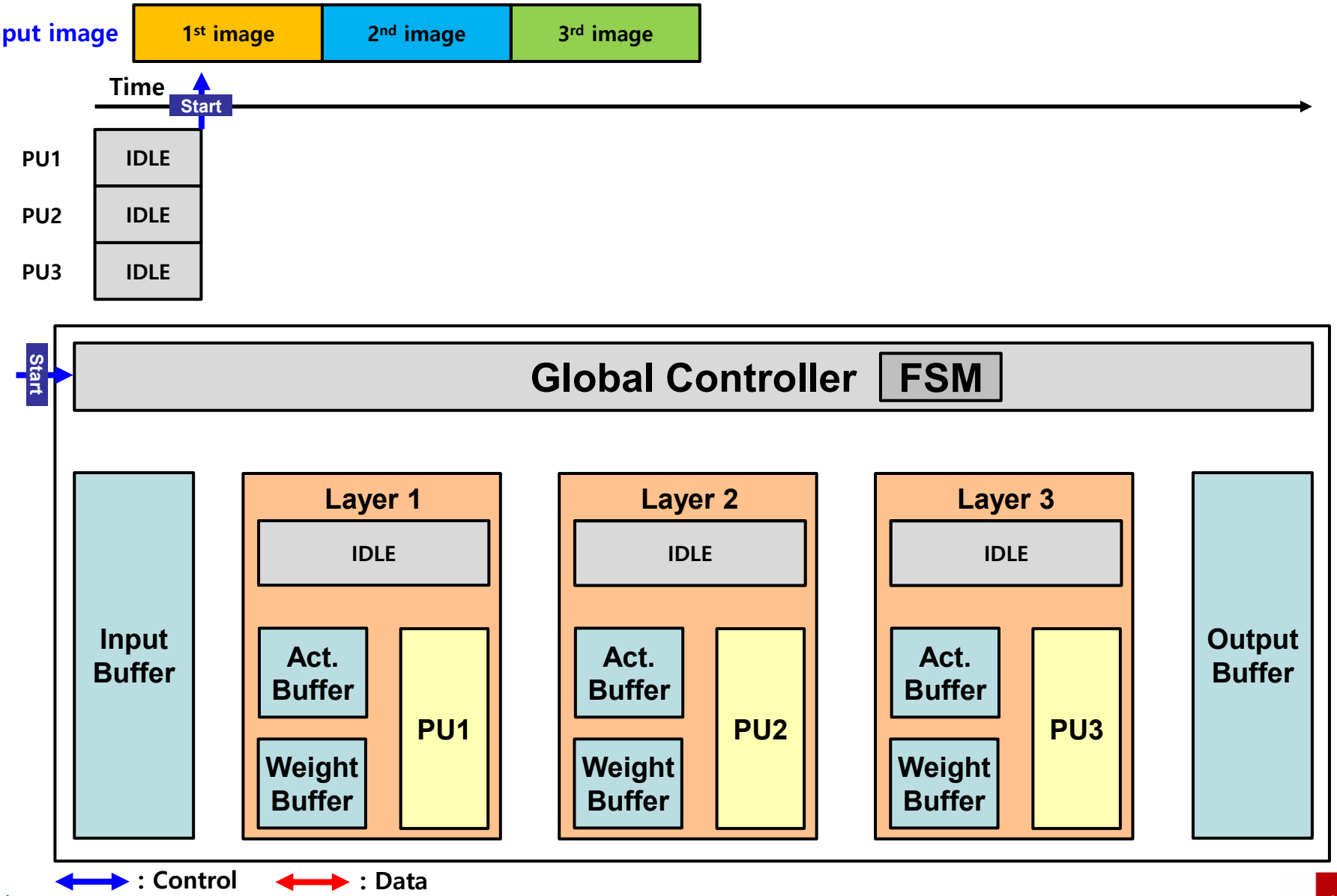

Streamline End-to-End Flow (2)

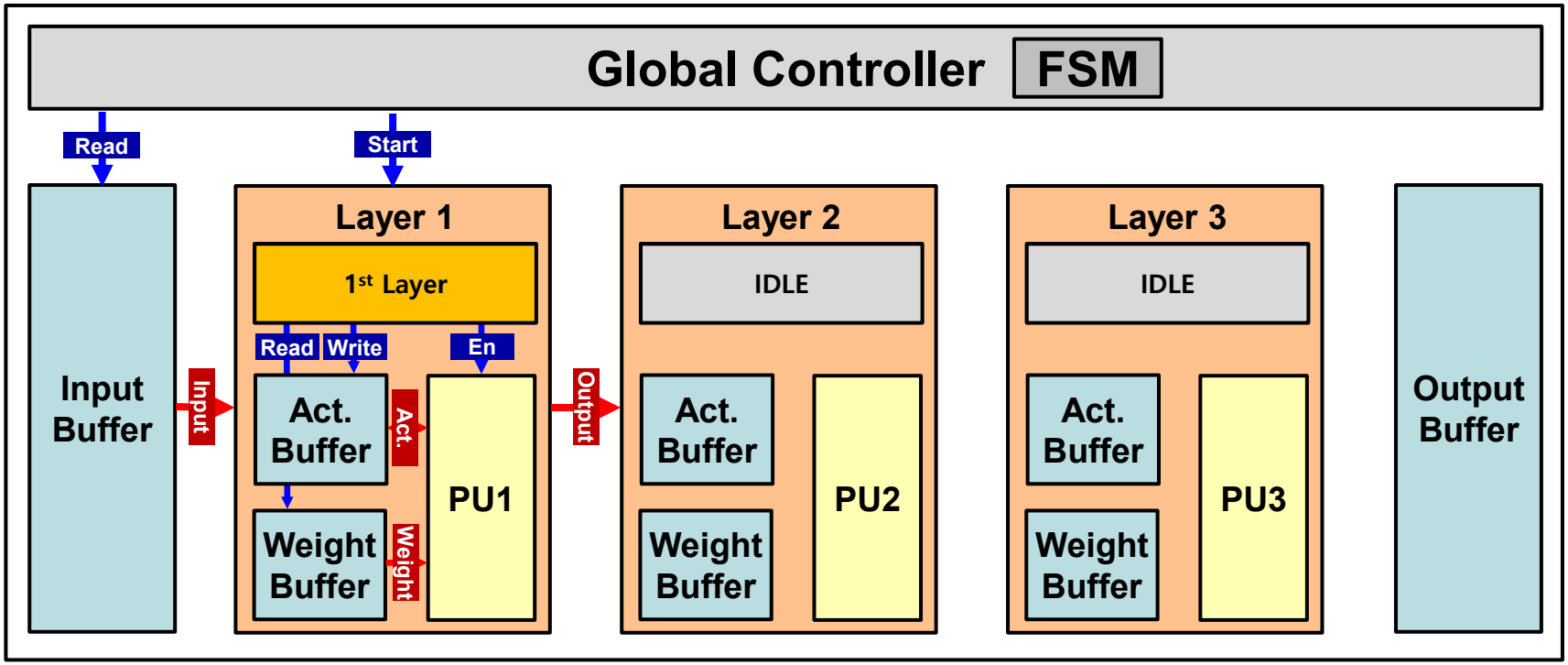

Streamline End-to-End Flow (3)

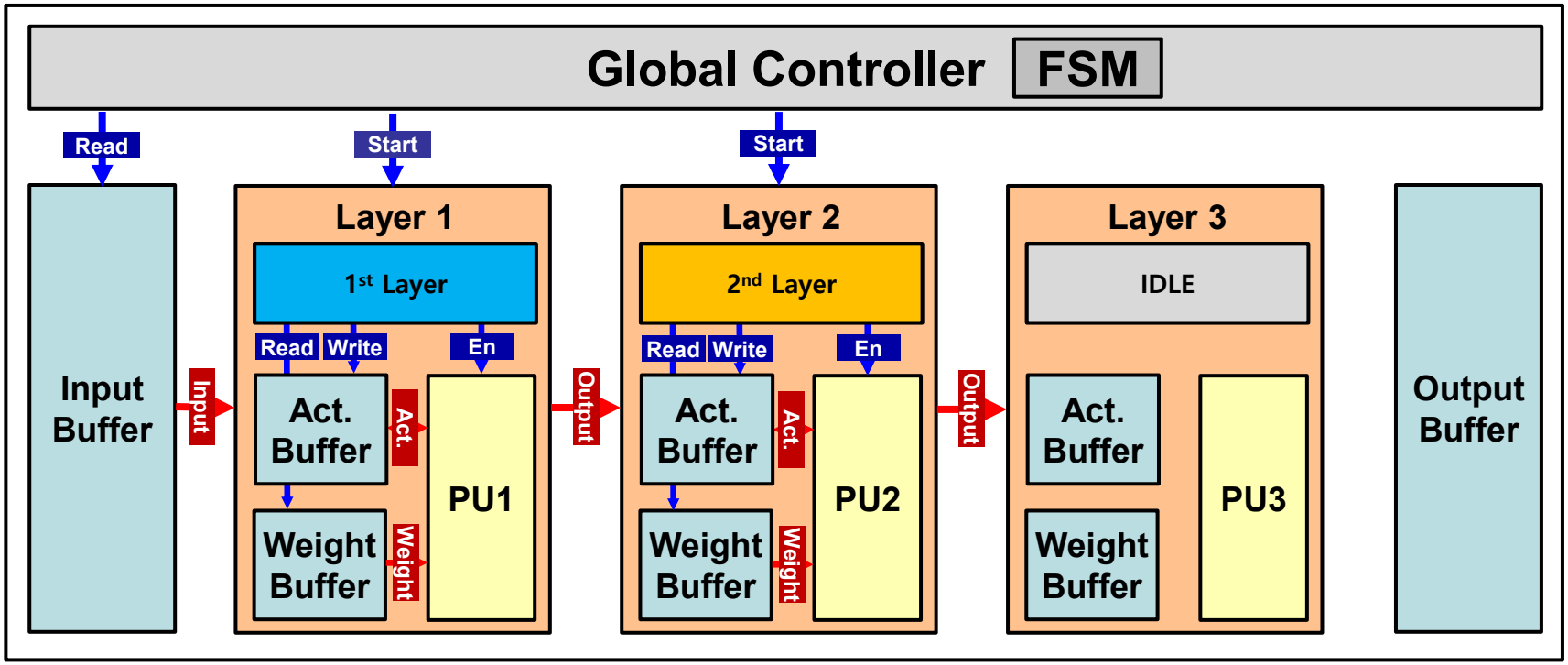

: Control : Data

Streamline End-to-End Flow (4)

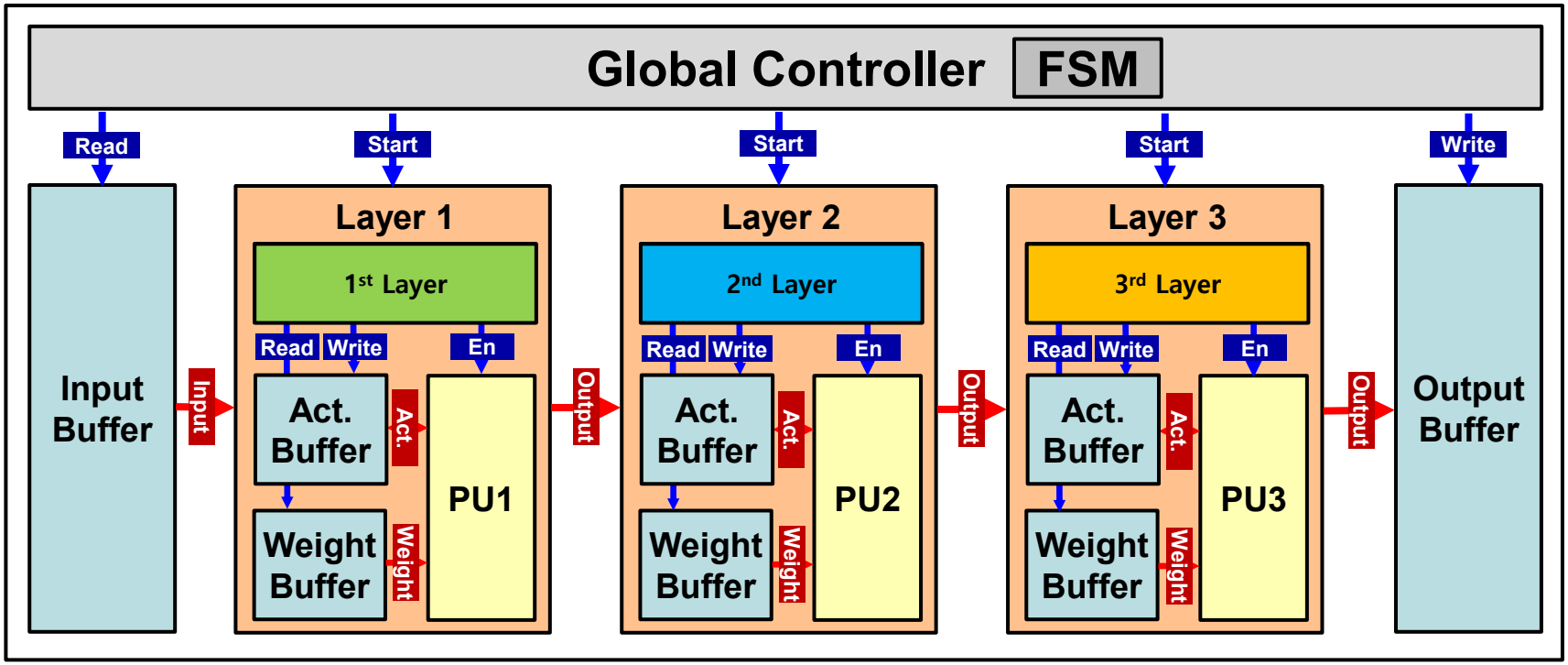

Streamline End-to-End Flow (5)

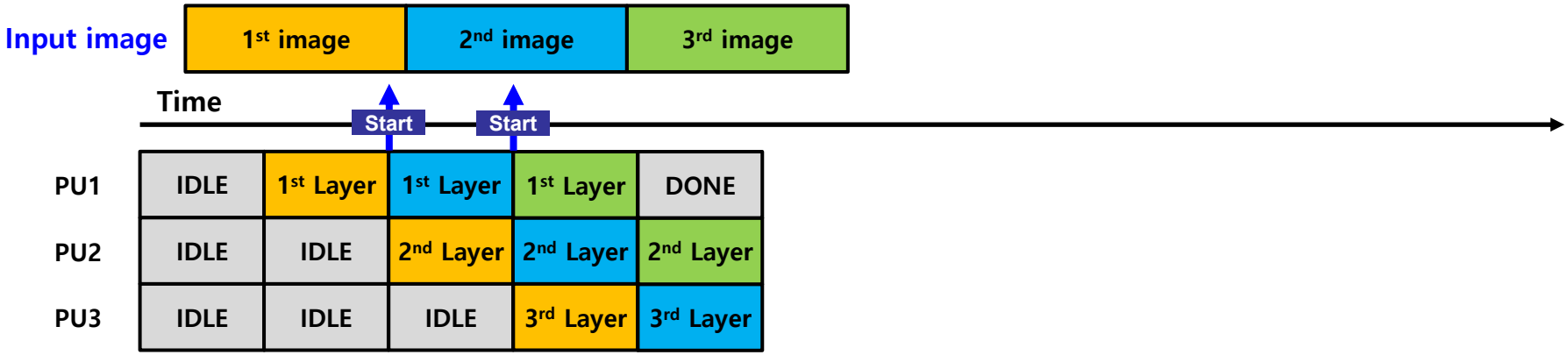

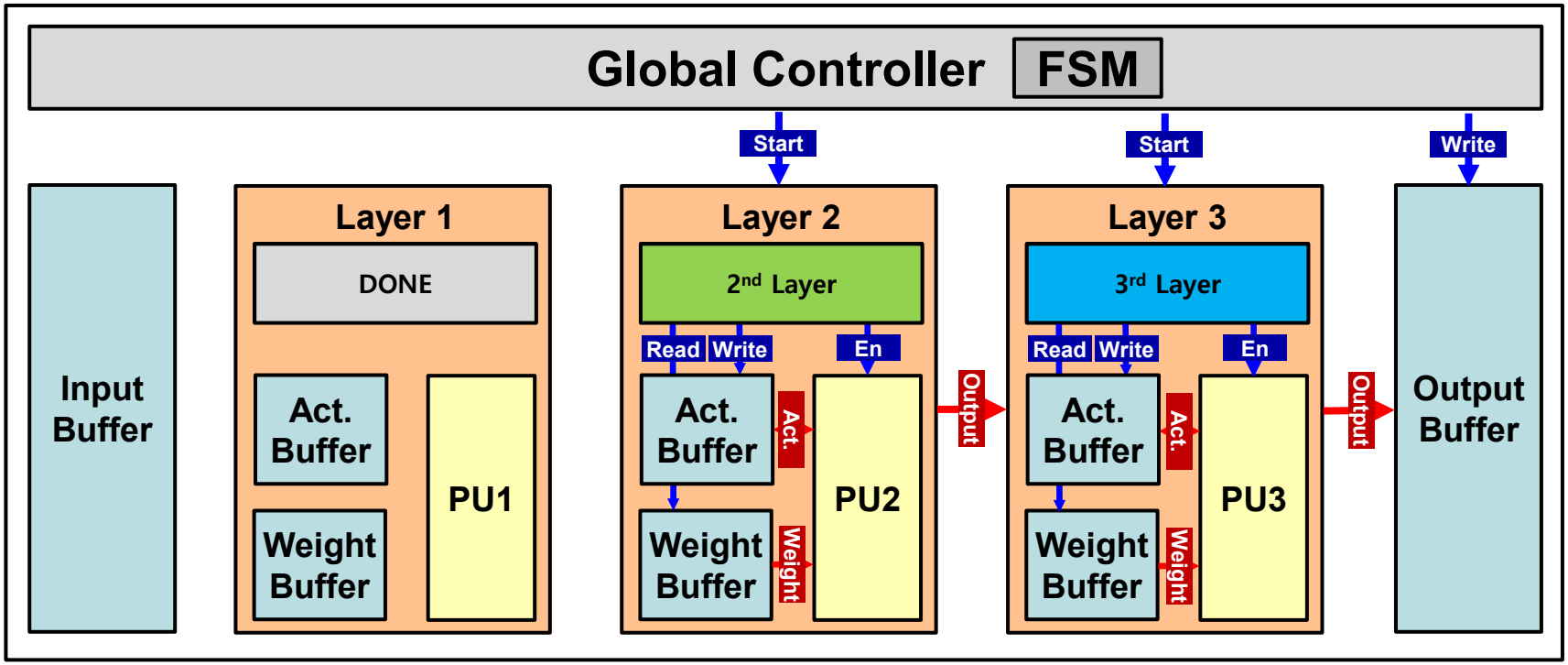

Streamline End-to-End Flow (6)

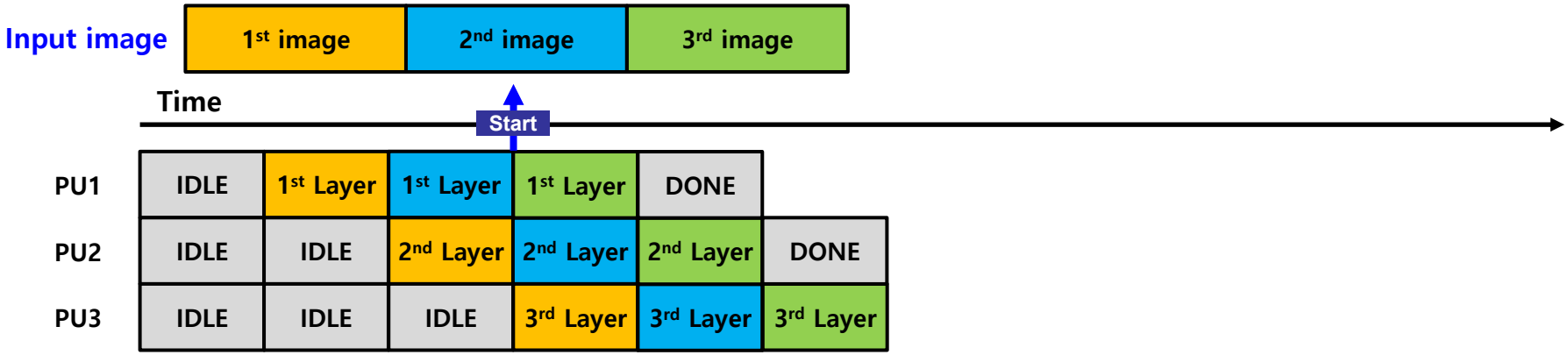

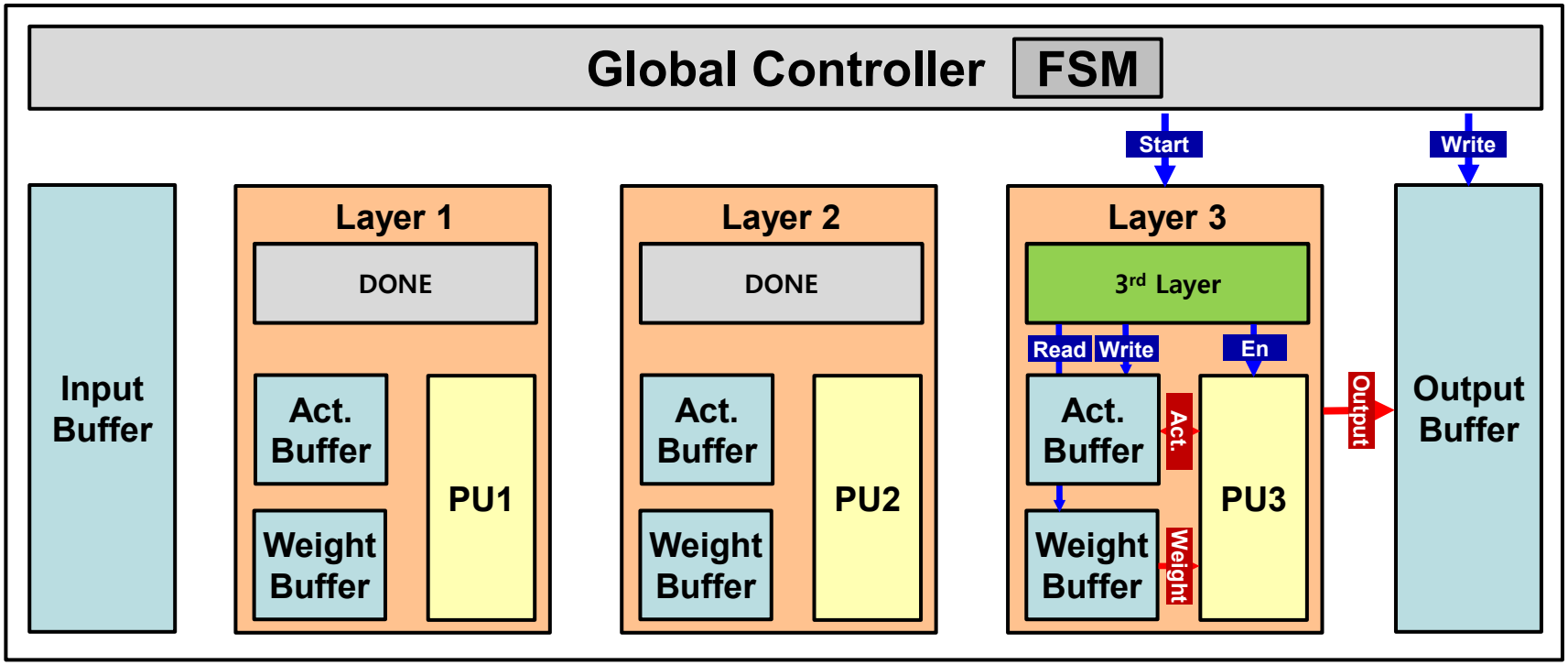

Streamline End-to-End Flow (7)

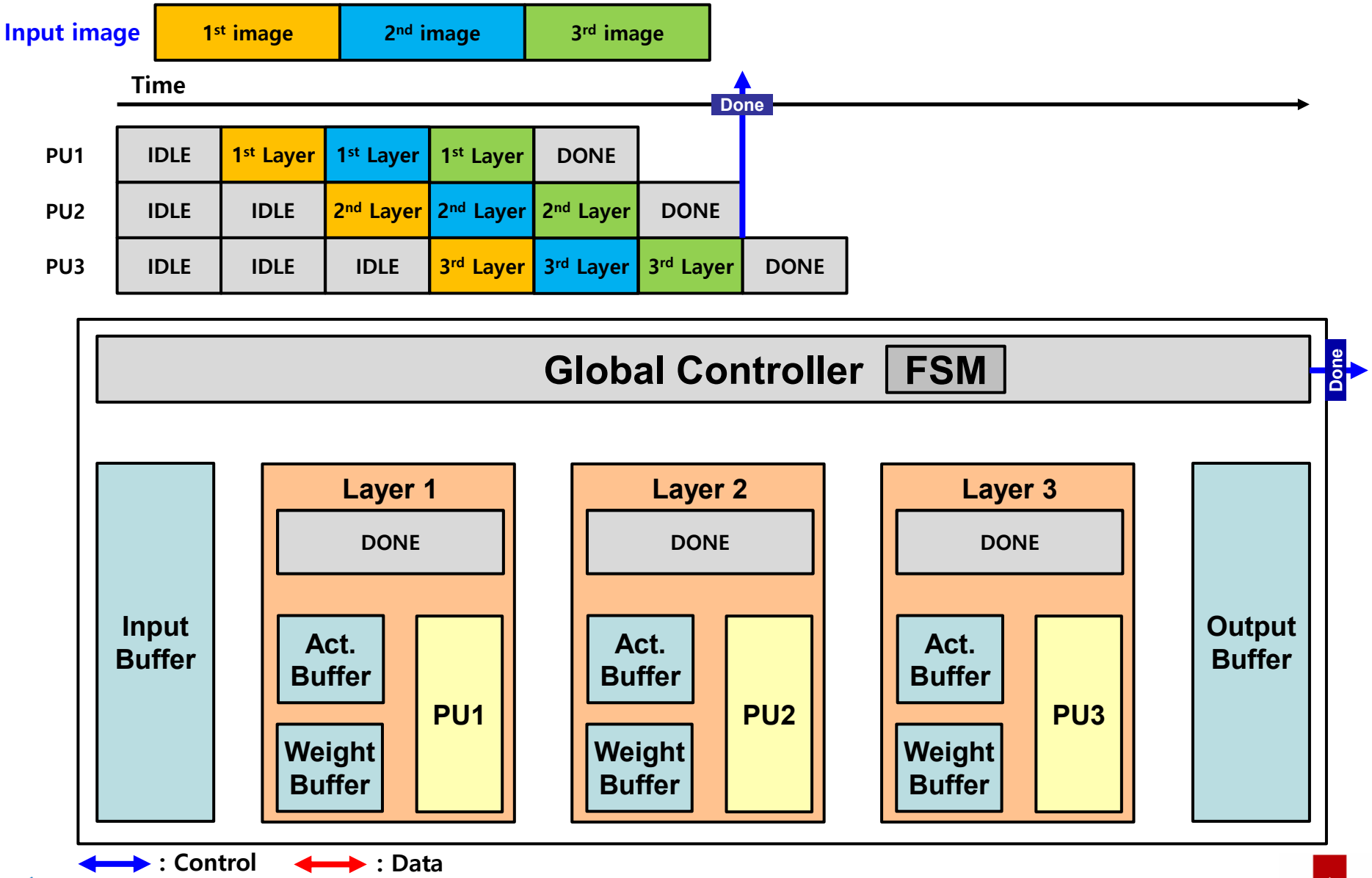

Contents

- Accelerator Architecture (Remind)
- Design Consideration

Recursive Architecture

Key Points of Recursive Architecture

- The structure that **reuses the same processing element (PE)** to utilize relatively fewer resources.
- This structure can design to use **overall fewer resources and consume less power**, in addition to **reusing buffers**.
- It is suitable for **resource-constrained designs** due to its small hardware area.

Recursive Architecture

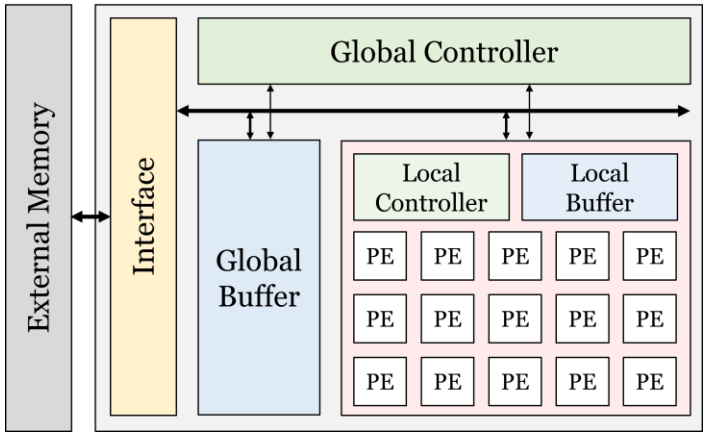

Streamline Architecture

Key Points of Streamline Architecture

- The structure that arranges processing elements (PEs) in a **continuous manner** to enable relatively **fast computations**.
- This structure can be designed to make calculations fast, but it uses a lot of resources and consumes a lot of power as a whole.
- It provides **high throughput** through parallel layer processing.

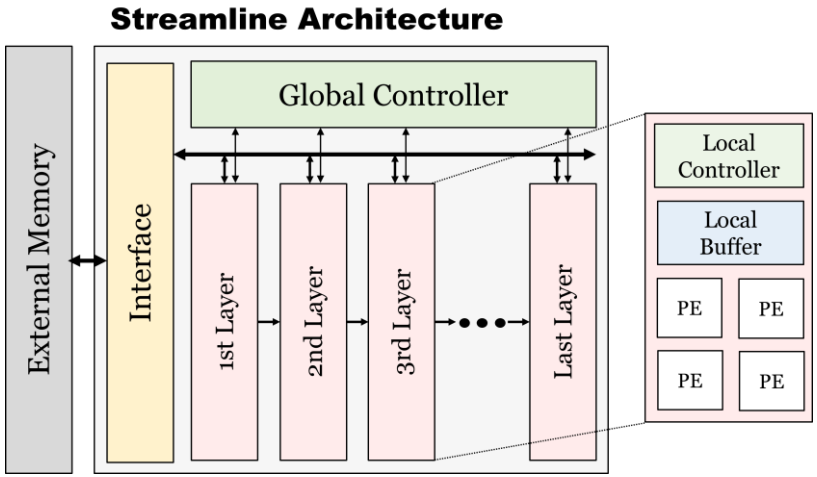

Design Consideration (1)

Throughput

- **Amount of operation** that can be processed in PU for a **certain period of time.**
- Throughput is determined by **PU size** and **data access pattern.**
- Throughput is better when it is **higher.**

Latency

- The **time spent** to process **certain amount of operation.**
- Latency is better when it is **lower.**

Design Consideration : Correlation

- When total operation is fixed, **throughput and latency are inversely related**.
- Moreover, there is a **trade-off between throughput and hardware area.**

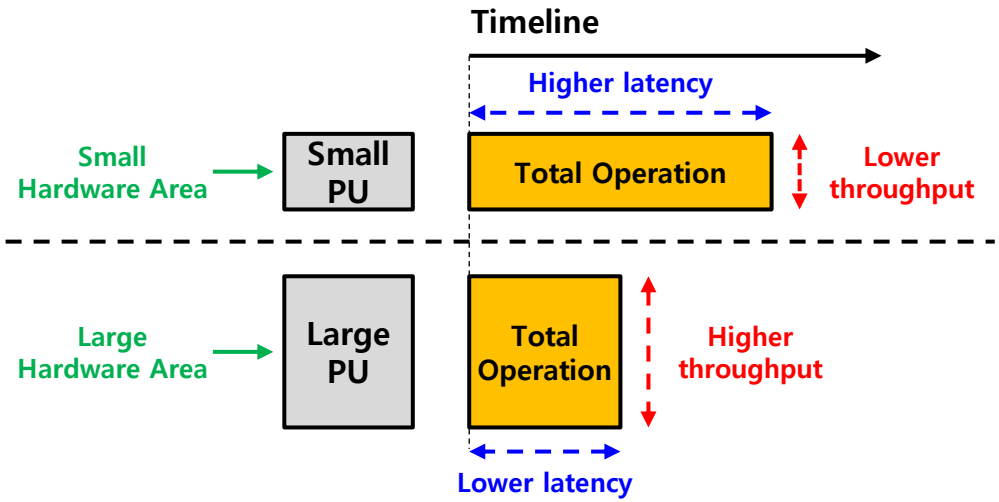

<Trade offs as Design Consideration>

Design Consideration (2)

Design Consideration : Parallelism Level

- As the level of parallelism increases, the required **memory bandwidth also changes**; therefore, the dataflow must be designed with buffer utilization and address generation in mind.
- Since the amount of data to be stored depends on the parallelism level, the operation order and controller design must also be carefully determined.

End-to-End Total Execution Time (1)

Recursive Architecture

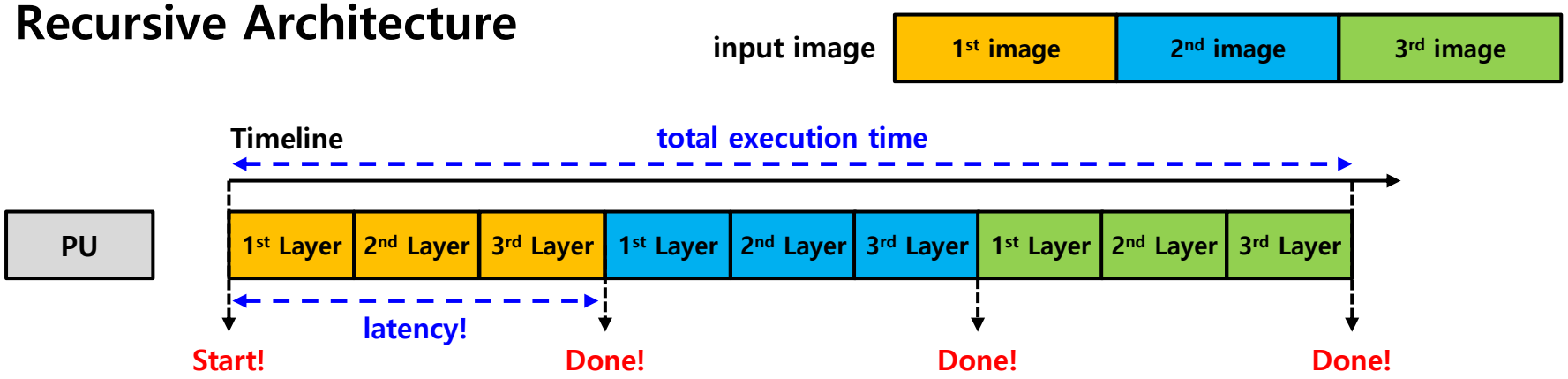

Streamline architecture

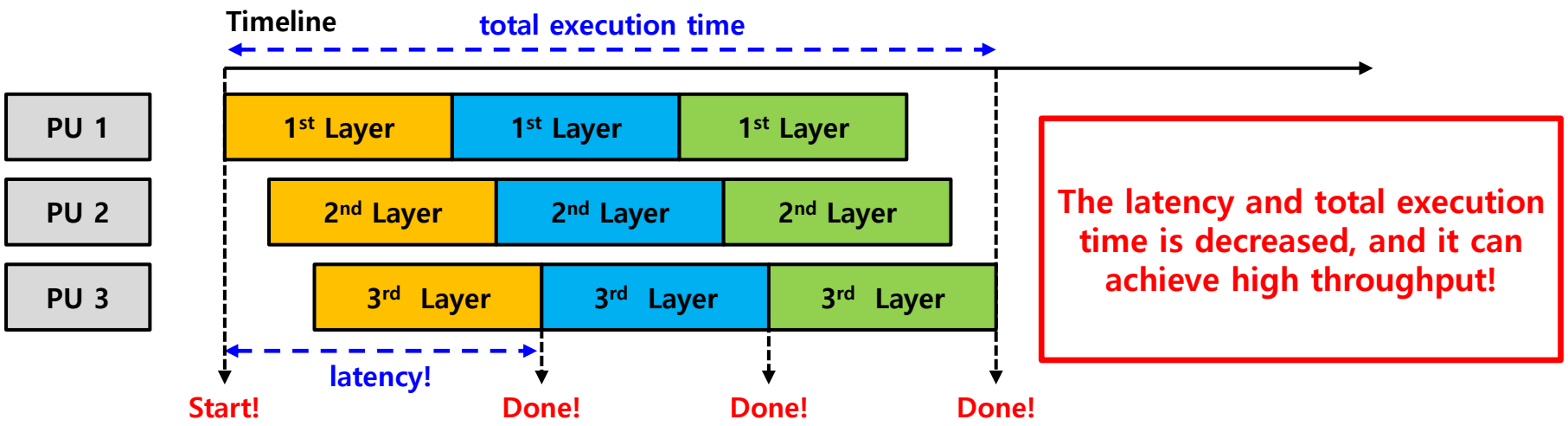

The latency and total execution time is decreased, and it can achieve high throughput!

Fully-Pipelined!

End-to-End Total Execution Time (2)

- When the number of operations is distributed unevenly.
- Recursive architecture

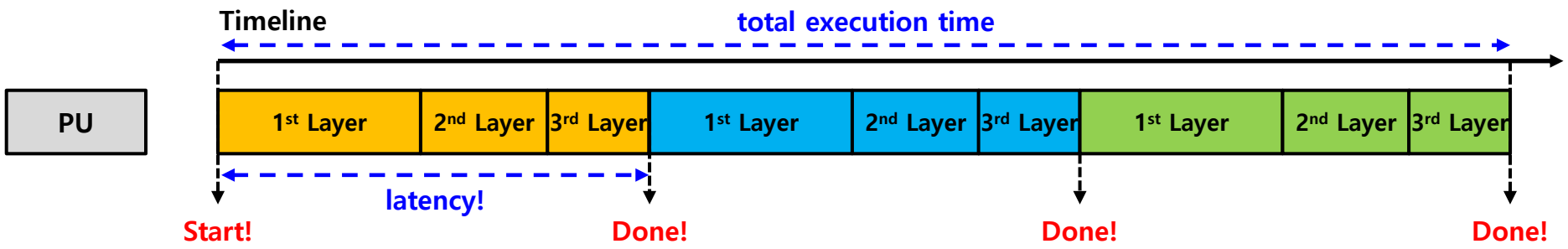

- Streamline architecture

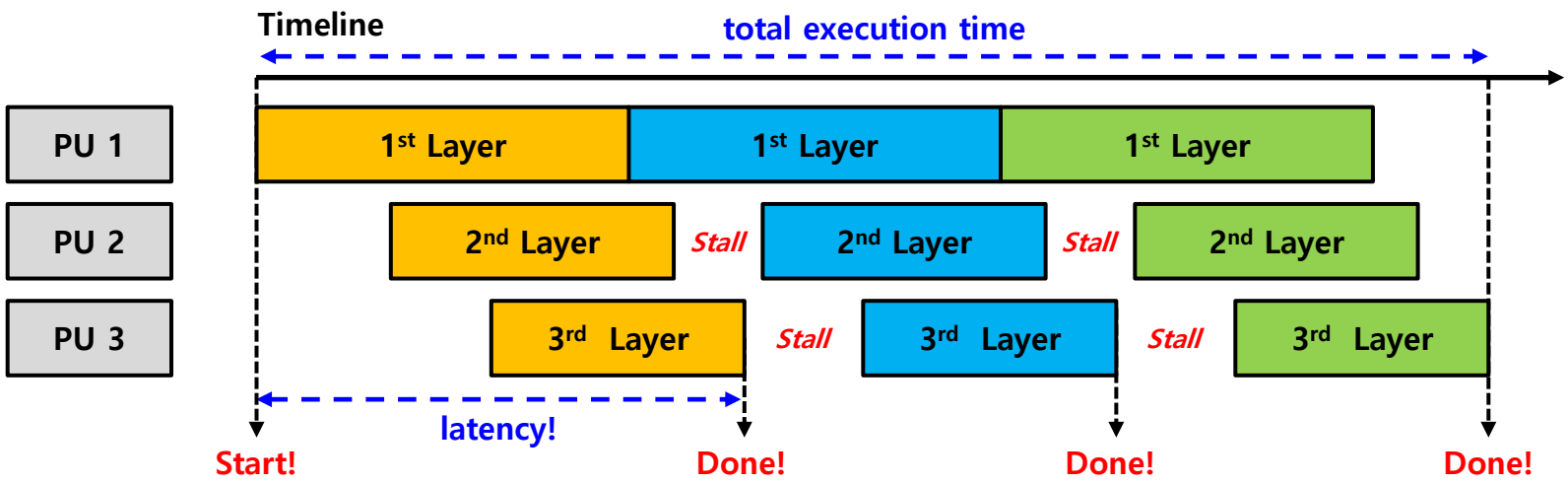

In the case of streamline architecture,
the more unbalanced the workload, the more difficult it becomes to optimize!

Thank You!